	=						
	=						

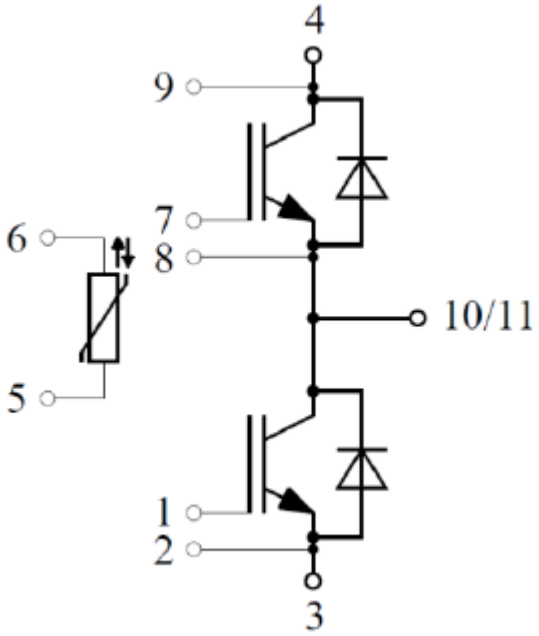
4
9
7
6
8
10/11
5
1
2
3

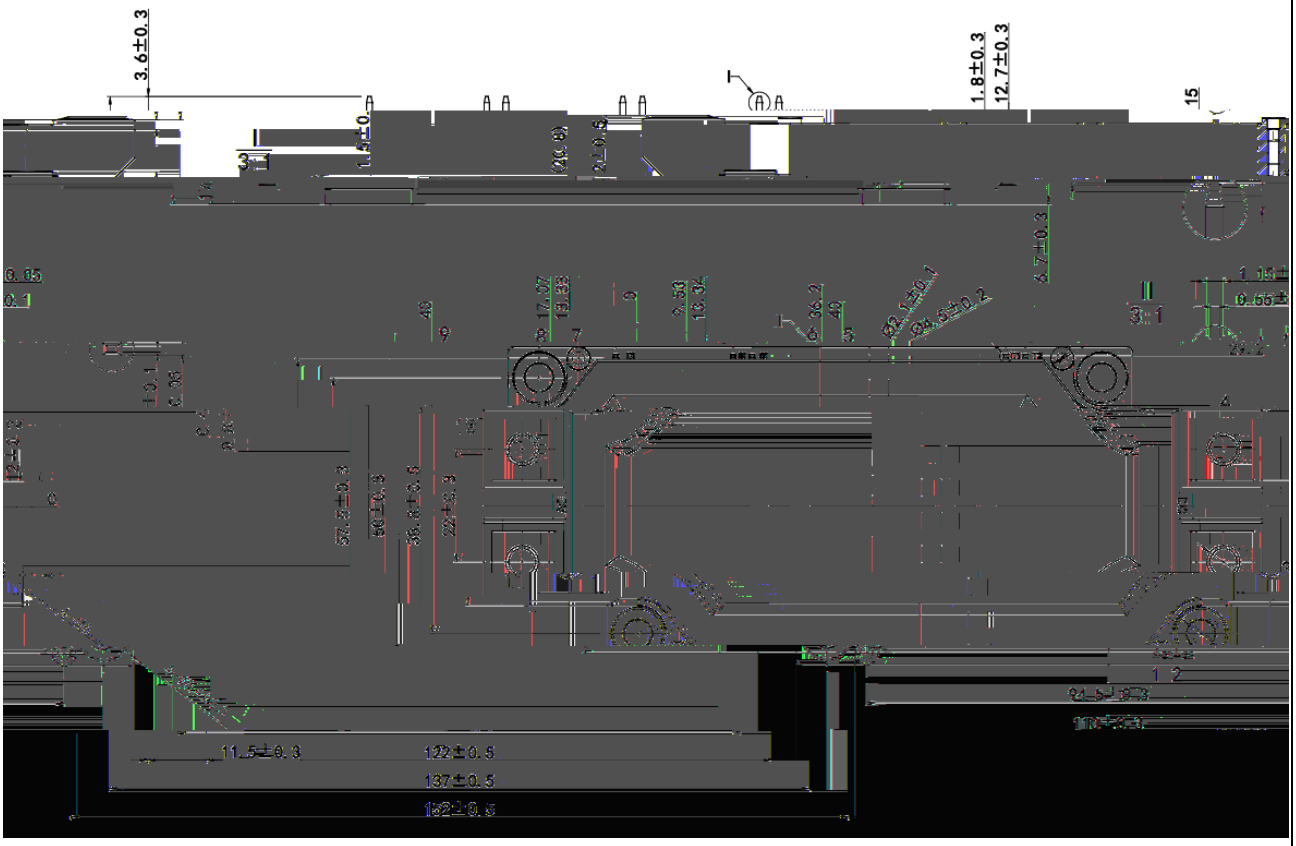
3.6±0.3
1.8±0.3
12.7±0.3
15
11.5±0.3
122±0.5
137±0.5