, 5

					"	"	"	

!

			"	"	"

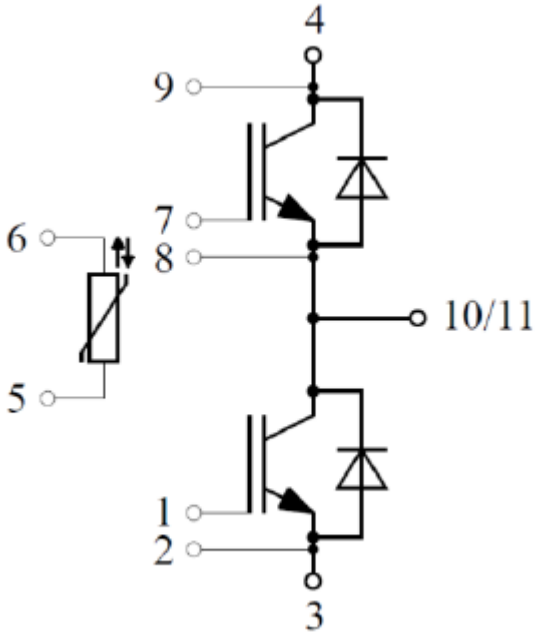
4
9
7
6
8
10/11
5
1
2
3

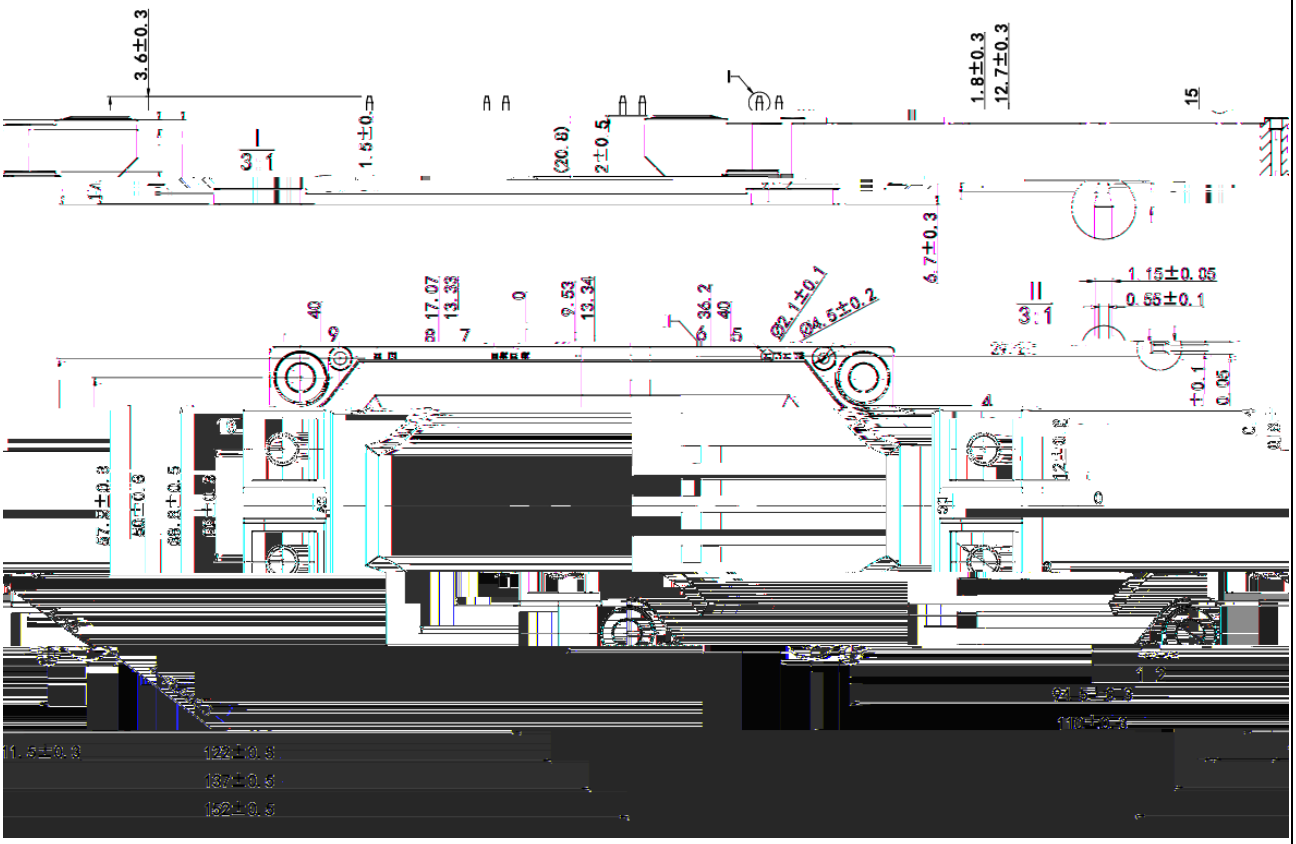
3.6±0.3
1.5±0.
(20.8)
2±0.5
1.8±0.3
12.7±0.3
15
6.7±0.3
17.07
13.33
9.53
13.34
36.2
Ø22.1±0.1
Ø24.5±0.2
1.15±0.05
0.55±0.1
47.2±0.3
26±0.6
68.8±0.5
12±0
11.5±0.3
122±0.3
130±0.3
152±0.3